Standard Diffuser Opal - 0.9 Metre

DIF-STD-OPAL-90CM / ITM001326



Datasheet

Standard Diffuser Opal - 0.9 Metre



Length	Material	Warranty
0.9 Metres	PC	5 Years

SKU: DIF-STD-OPAL-90CM
ITM: ITM001326

Key Features:

- **Dimensions (mm):** 16mm x 5mm x 900mm
- **Body Colour:** Opal
- **Diffuser Colour:** Opal
- **Dimensions (whl):** 16 x 5 x 900mm

Mechanical Data			
Body Colour:	Opal	**Diffuser Shape:**	Flat Diffuser
Illuminated Surface Width:	16mm	**Max LED Strip Light Width:**	12mm
Product Height:	5mm	**Product Length:**	900mm
Product Weight:	330g	**Product Width:**	16mm

Photometric Data			
Beam Angle:	105°	**Diffuser Colour:**	Opal

Environmental Data			
Anti-Glare:	No	**Body Finish:**	Plastic
Body Material:	Polycarbonate	**Impact Protection (IK):**	IK8
Ingress Protection (IP):	IP20		

Dimension Drawing

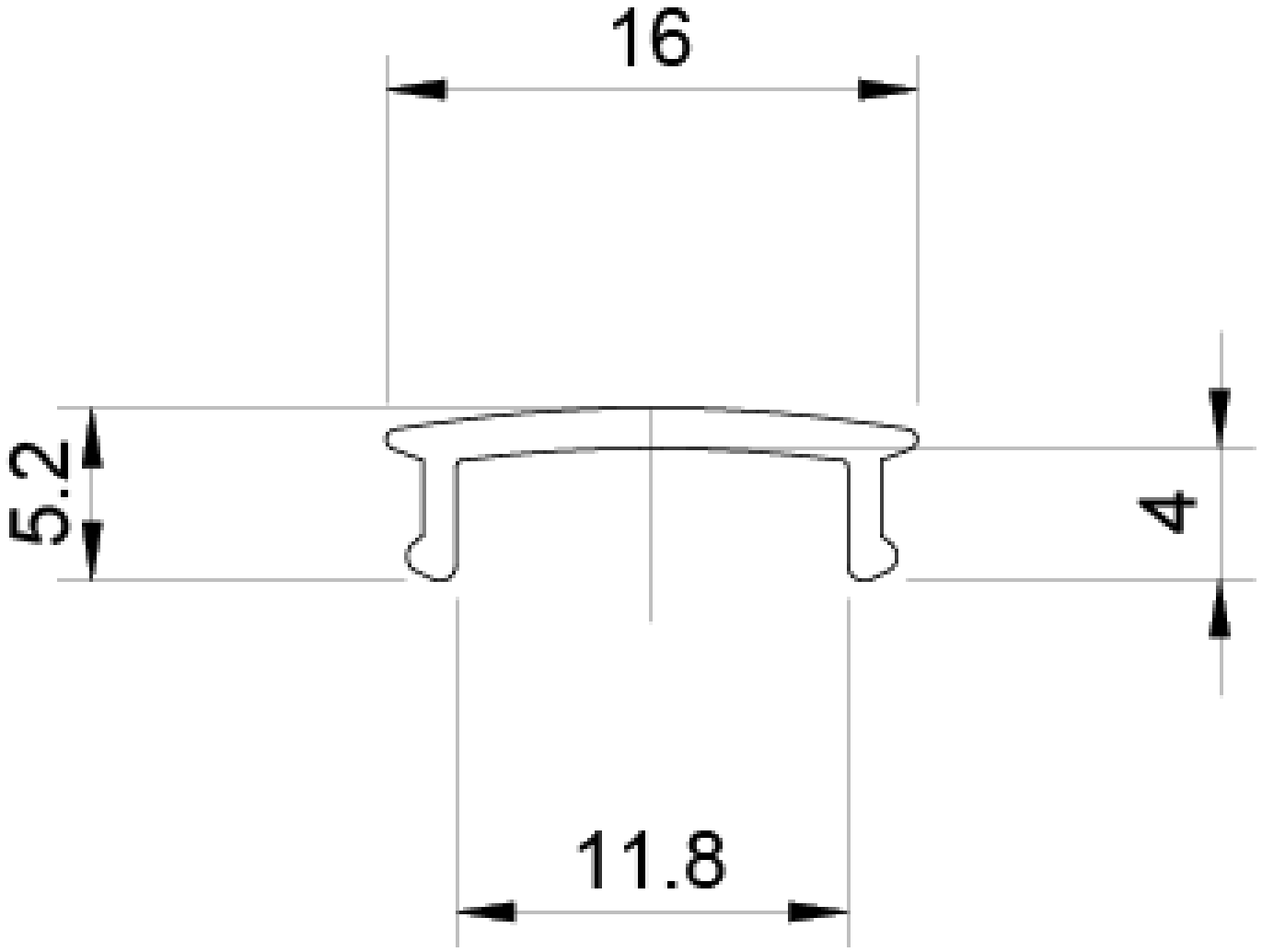

Packaging Data

Items / Sets Per Pack: 1

Disclaimer

Tagra Lighting have taken reasonable care to ensure that the information in this datasheet is accurate at time of publication however it should be noted that all specifications are subject to tolerance. Descriptive specifications such as colour are subjective. Tagra Lighting reserve the right to update specifications without notice. The information in the datasheet may only be relied on by customers of Tagra Lighting in accordance with applicable terms and conditions.

Tagra Lighting is a trading name of T.R Ventures Limited, a company incorporated in England with registered number 07757720. Our registered office is Unit 2, Southfield Industrial Estate, Trafford Park, M17 1SJ.

www.tagra-lighting.co.uk

